Ablerex

every moment counts

Odin

Odin Harsh

1000-3000 VA



SINGLE-PHASE ONLINE UPS

ODIN - ODIN HARSH

- Online double conversion technology (VFI) from 1000 VA to 3000 VA with a power factor of 0.9.
- Versatile: the display panel can be turned to transform the rack into a tower.
- Easy to install.
- Low running costs: the high efficiency VFI and ECO features minimise energy consumption.
- High uptime expandability.
- User-friendly monitoring software can be downloaded free and is compatible with the principle operating systems, for: monitoring functions, diagnostics, controlled shutdown of loads in the event of blackouts.
- High overload handling capacity.
- Constant voltage constant frequency (CVCF) output mode for maximum protection of particularly sensitive loads.
- Wide input voltage and frequency ranges reduce battery switching, thereby increasing battery life and efficiency.
- Option to set the percentage residual battery charge from 3% to 100% of the available capacity.
- The accurately calculated residual operating time is shown on the display.
- Two sets of IEC sockets that can be programmed separately.
- Cold start option without mains power.
- The firmware can be upgraded easily to implement new features.
- EPO or On/Off, with remote option.
- RS232 and USB ports, slots for optional communication cards.

Specifically for ODIN HARSH

- Built to guarantee efficiency and performance from -10°C to 55°C.
- Batteries designed for extreme temperatures.

ODIN - ODIN HARSH 1000-3000 VA

When you need to prevent a service outage and ensure safety and continuity in extreme conditions, you need a robust, highly reliable UPS.



Applications

- All applications in harsh climate areas
- Industrial applications
- IT and telecoms (transmitting-and-receiving stations)
- Underground transport
- Traffic control
- Wind farms
- Electromedical equipment

Suitable for 600mm cabinets.

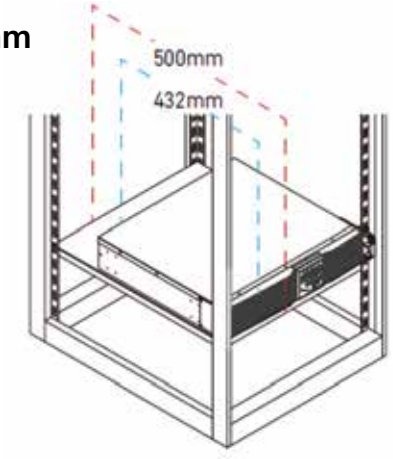



ODIN HARSH SINGLE-PHASE 1000-3000VA

ODIN - ODIN HARSH

ODIN - ODIN HARSH TECHNICAL DATA SHEET

MODEL			ODIN 1000RT	ODIN 2000RT	ODIN 3000RT
POWER	VA		1000	2000	3000
	W		900	1800	2700
INPUT	Rated voltage	Standard	110/150/180-300 VAC (@-10°C~40°C Based on load percentage 0 ~ 60% / 0 ~ 75% / 0 ~ 100%)		
		Harsh	"110/150/180-300 VAC (@-10°C~40°C Based on load percentage 0 ~ 60% / 0 ~ 75% / 0 ~ 100%) (@40°C~55°C 180-300 VAC Based on load percentage 0-60%)"		
	Frequency		44 – 66 Hz		
	Power factor		>0.99		
OUTPUT	Rated voltage	Standard	200/208/220/230/240 Vac		
		Harsh	230 V, adjustable to 200/208/220/230/240(@-10°C~40°C) 230 V, adjustable to 220/230/240(@40°C~55°C)		
	Voltage distortion		<3% with linear load, <6% with distorting load		
	Voltage stability		±1%		
	Frequency		50/60 Hz (selectable)		
	Frequency stability		±1 Hz or ±3 Hz (selectable)		
	Power factor	Standard	0.9		
		Harsh	-10 /+ 40 °C PF = 0.9 , +40/+55 °C PF = 0.6		
	Crest factor		3:1		
	Waveform		Pure sine wave		
	Output sockets		3 x IEC C13	6 x IEC C13	6 x IEC C13 1 x IEC C19
EFFICIENCY	VFI mode		up to 92%		
	ECO mode		up to 97%		
GENERAL	Dimensions (WxDxH) mm		440x405x88 (2U)	440xx432x132 (3U)	440x432x176 (4U)
	Weight (kg) ***		11.7	23	25
	Alarms		Audible and visual alarm alerts for: power failure, low battery, bypass transfer, and UPS fault.		
	Protection		Overload, overheating, short circuit, deep discharge, battery overcharging.		
	Operating mode		Multi-mode: VFI, ECO, Constant voltage constant frequency (CVCF) output.		
	Cold start from the battery without mains power		Included		
BATTERY	Battery type		Sealed maintenance free lead acid 12Vdc		
	Number per string		3	6	
	Uptime with internal battery in minutes	50% Load	14	15	12
		100% Load	5	5	4
	Charging time (90%)		4 – 6 hours		
	Battery expansion module dimensions (WxDxH) mm		440x430x88(2U)	440x430x176 (4U)	
ENVIRONMENTAL PARAMETERS	Operating temperature		0 – 40°C		
	Relative humidity		0% – 90% (non-condensing)		
	Altitude (a.s.l.)		<1000 m with no power derating, >1000 m with 1% derating for every 100 m.		
	Audible noise at 1 m.		≤50dB		
CONNECTIVITY	Built-in communication ports		USB, RS232, EPO and additional slots for optional cards		
	User interface		LED, LCD and function keys (parameters: voltage, frequency, percentage load, battery voltage, output voltage, estimated uptime, UPS temperature).		
	Optional accessories		Cards: SNMP, RS485 ModBus and dry relay contacts		
	Compatible software platforms		Microsoft Windows, Linux, Mac OS, VMware		
REGULATIONS	Standards		IEC EN 62040-1, IEC EN 62040-2, IEC EN 62040-3		
	Marking		CE		

* Battery weight and configuration depends on the required uptime **To be verified according to the battery parameters

ODIN 1000RT

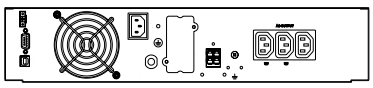

ODIN 2000RT

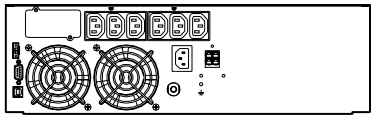

ODIN 3000RT

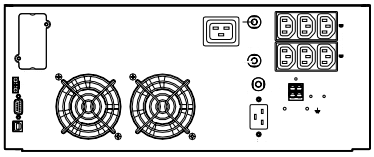



Online UPS for maximum protection and longer uptime of critical devices for small, medium and large businesses



Ares Pro
1000-3000 VA

Mars
6000-10000 VA

Ares Pro RT
1000-3000 VA

SINGLE-PHASE ONLINE UPS





Mars RT
6000-10000 VA



Odin
Odin Harsh
1000-3000 VA

Ablerex
every moment counts

Rev.2025/11 - Our commitment to continuous innovation means that catalogue data may be subject to change without notice

Ablerex Electronics Italy srl

Viale Milanofiori · Strada 6 · Palazzo N1
20089 Rozzano (MI)
info@ablerex.eu · Tel. +39 02 36696420
www.ablerex.eu

Ablerex Electronics Ltd

19 The Circle Queen Elizabeth Street,
London, Greater London SE1 2JE - UK
info@ablerex.uk · Ph. +44 (0) 7920 058834
www.ablerex.uk